GTD GROUP

BROCHURE

Summer 2021

DRILLING DOWN
THE COST PER METRE

SCAN QR CODE TO ACCESS THE MOST UP TO DATE ONLINE BROCHURE

CONTACT US FOR FULL SPECIFICATION SHEETS:
T: +44 (0) 1580 388792
E: INFO@GTDGROUP.CO.UK

TABLE OF CONTENTS

GTD DRILL RIGS, TRACKED CARRIERS, PISTON PUMPS & HYDRAULIC POWER PACKS 6
GTD MUD CLEANING & RECYCLING SYSTEMS 16
GTD PINK DRILL BITS 28
GTD PROBE REELERS 44
GTD GROUND SOURCE PROBES 50
GTD PROBE WEIGHTS 54
GTD GROUT & GROUTERS 56
GTD FRANCHISE & PACKAGED DRILLING OPERATIONS 62

ABOUT GTD

FROM **DRILL RIGS** TO **DRILL BITS**, THE GROWING **GTD** ECOSYSTEM OF EQUIPMENT AND SUPPLIES WILL **DRILL DOWN YOUR COST PER METRE.**

WHY ARE WE SO CONFIDENT OF THAT VERY BOLD PROPOSITION?

SIMPLE... OUR PRODUCT RANGE MIGHT BE **NEW TO THE UK MARKET – BUT NOT TO US!**

WE HAVE BEEN USING AND DEVELOPING THEM FOR YEARS IN OUR OWN DRILLING OPERATIONS, **REDUCING OUR PER METRE COSTS** WITH GREAT SUCCESS. **THIS ULTIMATELY EQUATES TO INCREASED PROFITS AND MORE COMPETITIVE OPPORTUNITIES.**

GTD HAS GROWN ITS RESEARCH & DEVELOPMENT TEAM AND **HAS ESTABLISHED TECHNICAL AND ENGINEERING PARTNERSHIPS WITH GLOBAL MANUFACTURERS,** NOT JUST RESELLING EQUIPMENT, BUT REFINING AND DEVELOPING PRODUCTS SPECIFICALLY FOR THE UK AND EUROPEAN MARKETS.

WE ARE NOW BRINGING TO MARKET THE PRODUCTS, EQUIPMENT AND SUPPLIES THAT WE HAVE RELIED ON WITH TOTAL CONFIDENCE IN OUR DRILLING OPERATIONS, SO YOU CAN TOO!

GTD DRILL RIGS

- TRACKED CARRIERS
- PISTON PUMPS
- HYDRAULIC POWER PACKS

WHY GTD DESCO DRILLING EQUIPMENT?

The answer is simple... productivity!

Quite literally our rigs drill down your cost per metre, both in purchase price and increased productivity.

How? There's less to go wrong for a start, after all, simplicity is complexity resolved. Our rigs don't stop when covered in mud (or anything else the job throws at it!) Less downtime means easier operation, easier maintenance and easier fixes. Our robust designs mean they just GTD - Get Things Done.

We are new to the UK market but not to the industry, these rigs have been supplied and operated all over the world.

We can provide a complete line of water well, exploration, multi purpose & horizontal directional drill rigs, as well as associated drilling equipment.

Contact us today to discuss your needs and to arrange a viewing of the rigs in action, on site... bring your boots as this will be a real world demo!

Our rigs can come with multiple options and completely customizable to your exacting needs, here are some of the options:

- Engine power and emission class
- Mast length, fixed or extendible
- Rod length
- Automatic rod handling system
- Mud pumps
- Vertical & angle drilling (45 degree - 90 degree)
- Single, double or triple clamps
- Breakout clamp & chain wrench
- Inverter and welder
- Wireless remote control
- Wireline and main winches

GTD CAN SPECIFY AND SUPPLY A FULL RANGE OF DRILL RIGS, FROM 10 TO 100 TON PULL UP FORCE

RIG TYPES:

GROUND SOURCE & WATERWELL

- GTD4500 - 200m, 8” hole, 10 ton pull up
- GTD5000 - 250m, 8” hole, 10 ton pull up
- GTD5500 - 300m, 10” hole, 12 ton pull up
- GTD6500 - 400m, 14” hole, 16 ton pull up
- GTD7000 - 600m, 18” hole, 25 ton pull up
- GTD7500 - 700m, 18” hole, 30 ton pull up
- GTD8500 - 900m, 20” hole, 40 ton pull up
- GTD9500 - 2500m, 24” hole, 80 ton pull up

EXPLORATION (CORE SAMPLING)

- GTD3500S - 300m NQ, Wireline, conventional coring, DTH, rotary drilling with 8 ton pull up
- GTD4500S - 500m NQ, Wireline, conventional coring, DTH, rotary drilling with 10 ton pull up
- GTD5000S - 700m NQ, Wireline, conventional coring, DTH, rotary drilling with 10 ton pull up
- GTD5500S - 500m HQ & 1000m NQ, Wireline, conventional coring, DTH, rotary drilling with 12 ton pull up
- GTD6500S - 700m HQ & 1300m NQ, Wireline, conventional coring, DTH, rotary drilling with 16 ton pull up
- GTD7000S - 1300m, Wireline, conventional coring, DTH, rotary drilling with 25 ton pull up
- GTD7500S - 900m PQ, Wireline, conventional coring, DTH, rotary drilling with 30 ton pull up

RIG TYPES:

HORIZONTAL & DIRECTIONAL

- GTD5500HDD - 3” hole, 10 ton pull up
- GTD6500HDD - 4” hole, 16 ton pull up
- GTD7500HDD - 24” hole, up to 600m, 30 ton pull up
- GTD8500HDD - 24” hole, up to 800m, 40 ton pull up

EXPLORATION (RC & MULTI-PURPOSE)

- GTD4500SARC - 4” hole up to 200m & NQ 500m, 10 ton pull up
- GTD5500SARC - 4” hole up to 250m & HQ 400m, 12 ton pull up
- GTD6500SARC - 4” hole up to 350m & HQ 700m, 16 ton pull up
- GTD7000SARC - 4” hole up to 500m & NQ 1100m, 25 ton pull up
- GTD7500SARC - 4” hole up to 700m & PQ 1000m, 30 ton pull up

GTD TRACKED CARRIERS

Multi-purpose tracked carriers, used to move your drill rods, air compressors and mud recycling equipment around the site. Primarily used for drill rods, relieving the physical effort required for lifting and loading the drill string. Additionally they can act as a hydraulic power pack, integrating other equipment such as Mud Pumps.

- **GTD800DS - 12 ton load capacity**
- **GTD600DS - 8 ton load capacity**
- **GTD400DS - 4 ton load capacity**

GTD MUD PUMPS

GTD have a range of piston pumps that can be integrated as part of the drill rig, track carrier or supplied as a stand alone unit. Fully hydraulic and with capacities of 150 - 1000 LPM up to 70 bar of pressure.

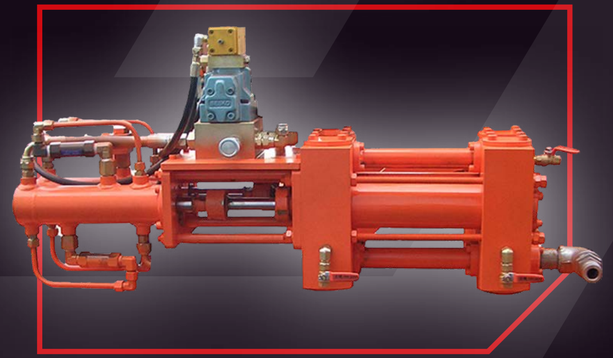

GTD MUD PUMP SPECIFICATIONS

DESCRIPTION	UNIT	GTD MUD PUMP SPECIFICATIONS				
		GTD MP200	GTD MP300	GTD MP600	GTD MP800	GTD MP1000
RATIO		1.6:1	2.5:1	3.2:1	3.2:1	3.2:1
TYPE		DOUBLE ACTING, DUPLEX PISTON				
DIA OF CYLINDER	MM	80	100	125	180	180
CAPACITY OF WATER	LMP	150	300	600	800	1000
MAX. CAPACITY OF WATER	LMP	200	400	800	1000	1200
MAX. WATER PRESSURE	BAR	70	70	70	70	70
DIA OF OUTPUT HOLE	MM	25	25	50	50	50
DIA OF INPUT HOLE	MM	35	35	63	63	63
STROKE LENGTH	MM	125	160	175	250	250
OIL FLOW	LMP	50	60	100	130	160
MAX. OIL PRESSURE	BAR	120	190	260	180	180
DIMENSIONS	MM	260*270*1000	305*300*1100	520*850*1320	690*940*2000	690*940*2000
WEIGHT	KG	165	200	450	600	700

GTD HYDRAULIC POWER PACKS

GTD has a full range of power packs available:

- 74hp - 490hp
- Various emission classes
- 200LPM - 1200LPM @ 280 Bar
- Tracked, Skid or Trailer mounted

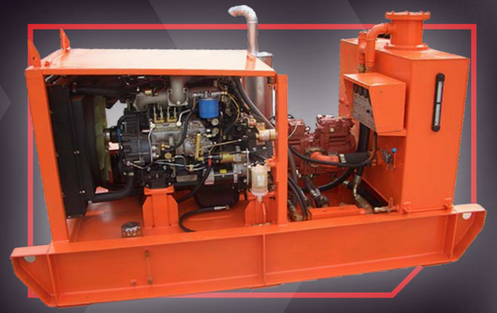

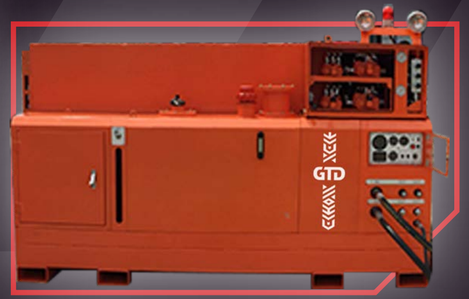

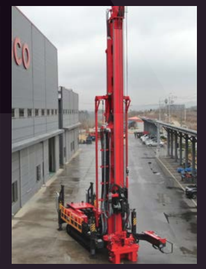

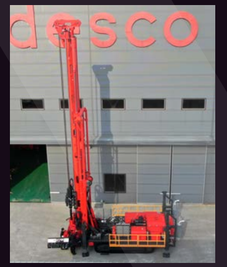

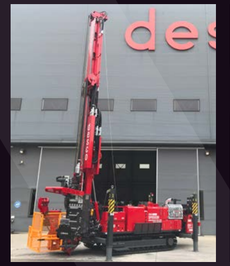

GTD MUD CLEANING & RECYCLING SYSTEMS

GTD MUD CLEANING & RECYCLING SYSTEMS

GTD design and manufacture a complete range of mud recycling equipment, from simple shaker units to full oil & gas field systems.

- **Skid, trailer, track or vehicle mounted**
- **Self powered, electric or hydraulic**
- **Off the shelf items or completely custom to your needs**
- **Complete after sale service, including on site training**

SHAKER

MUD RECYCLING SYSTEMS EXPLAINED: 3 MAIN STAGES

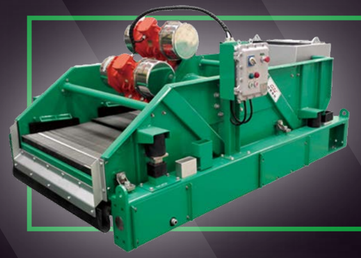

1. SHAKER

Removes the largest material and majority of the solids from the drilling fluids. The bigger the shaker screen area the larger volumes of flow it can handle.

2. HYDROCYCLONE

The size of the cone diameter defines the separation point. The smaller the cone the finer it can separate. Typically they are divided into Desander and Desilter. Usually a cone diameter of more than 6” is called Desander, we use 8” and 10” cone desanders to separate solid-phase particle size 47-76µm. With smaller 4” ‘Desilter’ cones separating down to 20 -25µm.

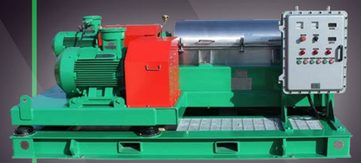

3. CENTRIFUGE

For barite recovery and fine / ultra fine solids separation. Essential when drilling through clays where the constant circulation of fluids breaks down the solids into fine / ultra fine material.

HOW TO SPEC YOUR MUD RECYCLING SYSTEM:

GTD design and manufacture a complete range of mud recycling equipment, from simple shaker units to full oil & gas field systems.

1. CAPACITY

This is probably the most important factor when choosing/specifying a system. Let us know how much fluid you are pumping down the hole and we can match a system to your needs.

2. FUNCTIONALITY

There are so many different options, and each user has their own specific requirements. We offer bespoke equipment tailored to your exacting needs. From lightweight trailer mountable units, remote control tracked units, containerised and vehicle mounted systems.

3. DIMENSIONS

Often the biggest constraint when picking a system is size and weight. We pride ourselves on finding solutions to best match your needs with efficient, purposeful design and engineering.

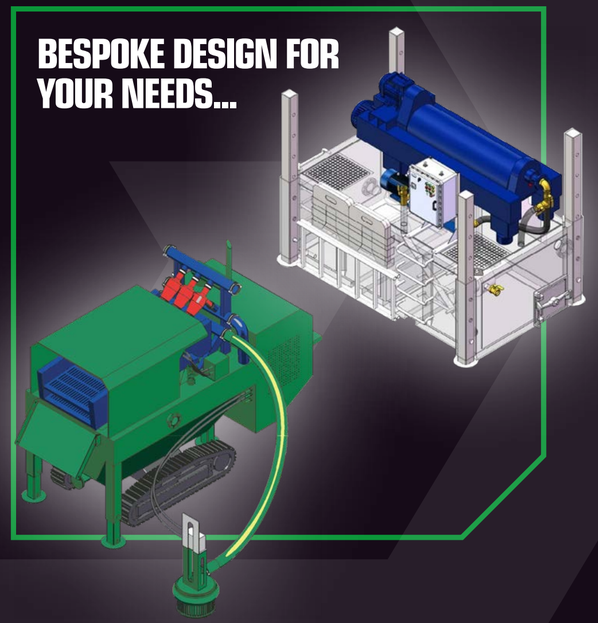

OFTEN THE BIGGEST CONSTRAINT WHEN SPECIFYING A SYSTEM IS SIZE AND WEIGHT

WE PRIDE OURSELVES ON FINDING SOLUTIONS

EXAMPLE SYSTEMS:

GTD-SC200

The GTD-SC200 is designed to UK specifications. Purpose built fluid recycling unit to remove and dispose of drilling cuttings in the mud flow cycle of the horizontal / vertical drilling and water well drilling industries.

Unit capacity 200GPM - 45m3/h

HOW DOES IT WORK?

Drilling fluid is circulated directly from the drill collar to the solids control shaker and hydrocyclones, where solids are removed. Cleaned drilling fluids are then returned to the drill rig or on to further Solids Control equipment such as the GTD-C250 Decanter Centrifuge.

This highly mobile unit is the ideal choice for core drillers or ground source operations, where ease of moving around sites or locations is essential.

It's light enough to be lifted with a telehandler and towed on a trailer.

IMPROVING EFFICIENCY & PRODUCTIVITY

The shaker provides pre-screening of the high-volume mud flows before the fluids are pumped to the hydrocyclones.

The unit's high-speed shale shaker operates with a G-force of 7.1G and the desander hydrocyclones can remove solids down to 20-25 microns. This keeps the drilling fluids in excellent condition.

By maintaining clean, non-abrasive fluids, the GTD-SC200 can reduce mud & water consumption, wear-and-tear on drilling components and overall downtime, which allows you to focus on the drilling operations, eliminating unnecessary monitoring & mixing mud.

KEY BENEFITS - GTD-SC200

- **Removes low gravity solids for greater drilling efficiency**
- **Reduces water, mud, transportation and mud disposal costs**
- **Eliminates the cost of digging sumps**
- **Reduces site footprint, site remediation and environmental management costs**
- **Improves on-site health and safety, reducing slips and hazards due to mess, mud and water**
- **Easy to transport "single unit" package**

TECHNICAL SPECIFICATIONS

Total Unit

Length	3,506mm (11.5ft)
Width	2,054mm (6.7ft)
Height	2,637mm (8.6ft)
Tank Volume	1m3
Unit Capacity	200 Gpm / 750 Lpm
Total Power	13kW

Hydrocyclones (Either 10" or 4")

10 Inch cone	x 1 (70 micron)
4 Inch cones	x 4 (25 micron)
Capacity	120m3/h

Shaker

Lower screen size	1.35m2
Upper screen size	0.875m2
Motor	2 x 0.75kW
Capacity	45m3/h

Feed Pump

Size	4"x 3"x 11"
Flow	45m3/h
Motor	11kW
Head	25m

EXAMPLE SYSTEMS:

GTD-C220

The GTD-C220 Decanter Centrifuge is UK designed and purpose-built for the removal of low gravity or small particle size solids, in all solids control applications.

Unit effective capacity 6m3/h.

HOW DOES IT WORK?

Drill fluid is pumped to the Decanter Centrifuge tank from either the drill collar or upstream solids control equipment, such as the GTD-SC200.

The fluid is then drawn up from the tank by the Progressing Cavity Pump or submersible, then fed into the high-speed centrifuge, which removes solids down to 2-5 microns before returning the cleaned drill fluid to the drilling process.

In tank submersible mixers keep the fluids circulating and solids in suspension.

IMPROVING EFFICIENCY & PRODUCTIVITY

The unit's high speed decanting centrifuge is specifically adapted for drilling operations, generating huge G-forces, to remove solids down to 2-5 microns keeping drilling fluids in excellent condition.

This unit can be used independently or in combination with other solids control equipment. The GTD-C220 can provide cleaning of the drilling fluids directly from the collar with process rates up to 100L/min.

In higher flow rate applications, the unit can provide additional low particle size removal as part of a bypass loop when paired with other equipment.

KEY BENEFITS - GTD-C220

- **Removes low gravity solids for greater drilling efficiency**
- **Reduces water, mud, transportation and mud disposal costs**
- **Eliminates the cost of digging sumps**
- **Reduces site footprint, site remediation and environmental management costs**
- **Reduces wear and tear on drill components**
- **Improves on-site health and safety, reducing slips and hazards due to mess, mud and water**
- **Easily used in combination with other GTD equipment to provide enhanced mud recycling and cleaning**

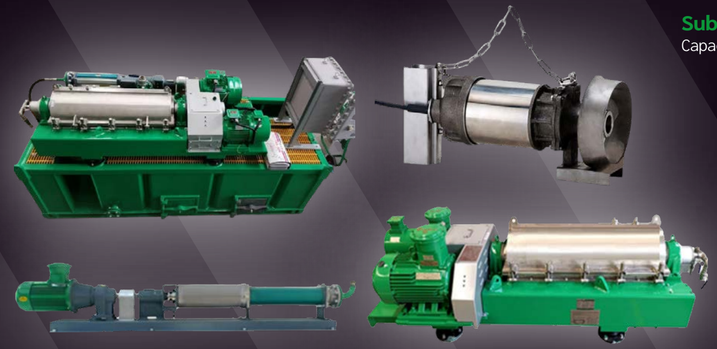

TECHNICAL SPECIFICATIONS

Total Unit

Length	3,340mm (10.93ft)
Width	1,370 (4.49ft)
Height	1,945mm (6.3ft)
Tank Volume	3m3
Unit Capacity	26 Gpm / 100 Lpm
Total Power	21kW

Centrifuge - VFD

Bowl Length	670mm (26inch)
Bowl Diameter	220mm (9inch)

Feed Pump

Model	NETZSCH/Seepex
Motor	3kW
Flow	6m3/h

Submersible Tank Mixers

Capacity	2 x 3.2 m3/min

EXAMPLE SYSTEMS:

IMPROVE PRODUCTIVITY, ENVIRONMENTAL IMPACT AND HEALTH & SAFETY WITH GTD MUD CLEANING AND RECYCLING SYSTEMS

GTD-C250

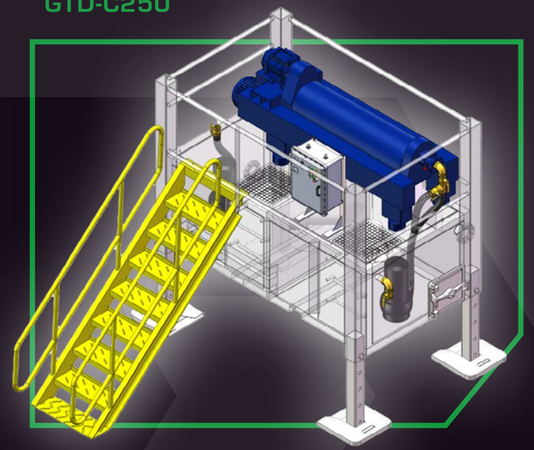

Skid Mounted Decanter Centrifuge

- Fine solids removal
- < 2815kg (tri axle trailer mountable,3500kg)
- 250mm Decanter Centrifuge
- Submersible feed pump
- Submersible discharge pump
- Height adjustable for solids skip discharge
- Clean / dirty split tanks
- 3000 Litre tank
- Submersible tank agitators
- 21kw power

GTD-SC300

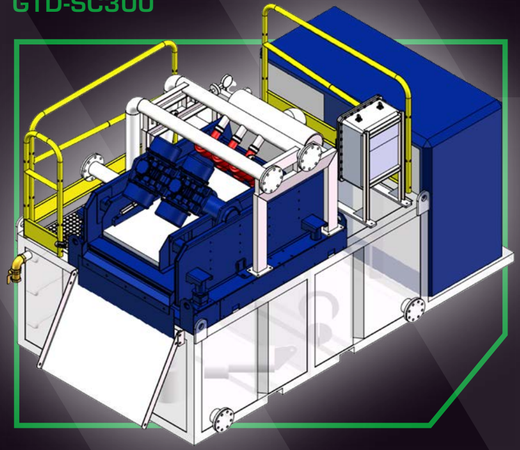

Skid Mounted Shaker & Hydrocyclones

- Primary and secondary solids removal
- < 2815kg (tri axle trailer mountable,3500kg)
- 70m³/h double deck, height adjustable shaker
- 3 x 4" Hydrocyclones for solids removal to 20 -25µm
- Submersible feed pump
- Clean / dirty split tanks
- 3500 Litre tank
- Submersible tank agitators
- Self powered by generator

GTD-SCC300TC

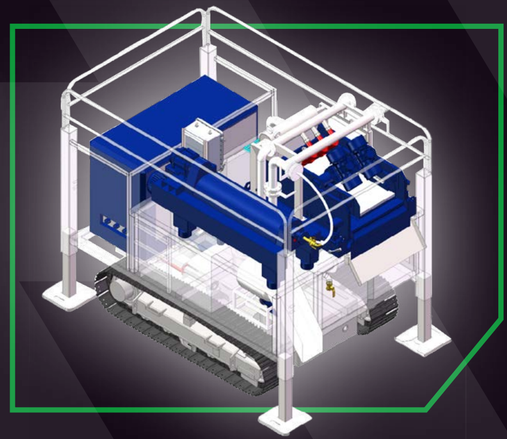

Track Mounted Shaker, Hydrocyclones & Centrifuge

- Primary, secondary & fine solids removal
- 70m³/h double deck, height adjustable shaker
- 3 x 4" hydrocyclones for solids removal to 20 -25µm
- 250mm decanter centrifuge
- Submersible feed pump
- Auger fed progressive cavity pump
- Clean / dirty split tanks
- 3500 Litre tank
- Submersible tank agitators
- Electric hydraulic power pack - with aux fittings
- Self powered by generator

GTD PINK DRILL BITS

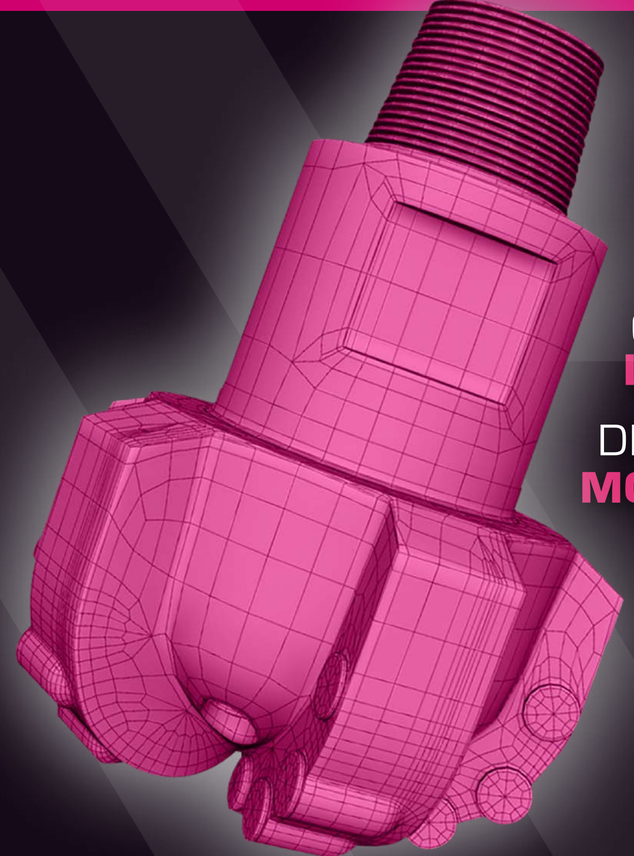

COST **LESS**

DRILL **MORE**

OUR DRILL BITS

Introducing the GTD Pink Drill Bits and our ‘Penetrator’ range.

NON CORE PDC

PDC bits in various body designs and sizes to cater for soft and medium formations

ROCK ROLLERS

Steel toothed or TCI bits for harder formations

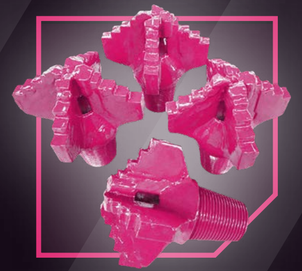

TCI DRAG

Tungsten Carbide Insert drag bits for soft formations

CORE

Core bits

PINK ‘PENETRATOR’ - NON CORE PDC

PDC CURVED DRAG BIT 3 WING - WIDE FLUSH

SANDSTONE & MUDSTONE

A great bit to have on the shelf for when you’re drilling in harder sand and mudstone, its less aggressive curved shape, coupled with the increased number of PDC bits protect the gauge and life of the bit. This bit will last longer whilst still being able to apply down pressure, keeping up a great penetration rate. Wide flush design incorporated to clear the bit of sharp hard cuttings that would otherwise damage the PDC cutters.

- **Sizes ranging up to 300mm***
- **13mm PDC cutters with carbide protection added for durability**
- **ALL thread types available**
- **Increased internal diameter to reduce choke point and increase flow**

DESCRIPTION	
PDC CURVED DRAG BIT - **3 WING**	
3 3/4” (95.25 MM)	£376
4 1/2” (114.3MM)	£416
4 3/4” (120.65MM)	£418
4 7/8” (123.825MM)	£420
5 1/8” (130.175MM)	£424
5 1/2” (139.7MM)	£480
5 5/8” (142.875MM)	£485
7 3/8” (187.325MM)	£608

*Further sizes available in all thread types and different internal diameters

PINK 'PENETRATOR' - NON CORE PDC

PDC STEPPED DRAG BIT 3 & 4 WING - WIDE FLUSH

ALL-ROUNDER

A great all round drill bit that can deal with clay, chalk, mudstone and sandstone.

- **Sizes ranging up to 300mm***
- **13mm PDC cutters with carbide protection added for durability**
- **ALL thread types available**
- **Increased internal diameter to reduce choke point and increase flow**

DESCRIPTION	3-WING	4 - WING
PDC STEPPED DRAG BIT		
3 3/4" (95.25 MM)	£293	£326
4 1/2" (114.3MM)	£329	£366
4 3/4" (120.65MM)	£334	£371
4 7/8" (123.825MM)	£360	£400
5 1/8" (130.175MM)	£369	£410
5 1/2" (139.7MM)	£394	£438
5 5/8" (142.875MM)	£400	£445
7 3/8" (187.325MM)	£601	£668

*Further sizes available in all thread types and different internal diameters

PINK 'PENETRATOR' - NON CORE PDC

PDC STEPPED DRAG BIT 3 & 4 WING - JET FLUSH

ALL-ROUNDER

A great all round drill bit and our biggest seller, can deal with clay, chalk, mudstone and sandstone.
Probably the best value drill bit for cost and productivity.

- **Sizes ranging up to 300mm***
- **13mm PDC cutters with carbide protection added for durability**
- **ALL thread types available**
- **Increased internal diameter to reduce choke point and increase flow**

DESCRIPTION	3-WING	4 - WING
PDC STEPPED DRAG BIT		
3 3/4" (95.25 MM)	£293	£326
4 1/2" (114.3MM)	£329	£366
4 3/4" (120.65MM)	£334	£371
4 7/8" (123.825MM)	£360	£400
5 1/8" (130.175MM)	£369	£410
5 1/2" (139.7MM)	£394	£438
5 5/8" (142.875MM)	£400	£445
7 3/8" (187.325MM)	£601	£668

*Further sizes available in all thread types and different internal diameters

PINK 'PENETRATOR' - NON CORE PDC

PDC JUNK SLOT DRAG BIT 5 WING

SAND & SILT

A drill bit designed specifically for the fast drilling in sandy conditions, they also cope exceptionally well with clay and sandstone.

- **Sizes ranging up to 300mm***
- **13mm PDC cutters with carbide protection added for durability**
- **ALL thread types available**
- **Increased internal diameter to reduce choke point and increase flow**
- **Large circulation ports on the side of the bit to reduce plugging in softer formations**
- **Extra large junk slots to help the cuttings flow up hole and not ball up the bit.**

DESCRIPTION	
PDC JUNK SLOT DRAG BIT	
100MM	€ 747.50
130MM	€ 884.00
135MM	€ 897.00
140MM	€ 910.00
150MM	€ 975.00
160MM	€ 1,040.00

*Further sizes available in all thread types and different internal diameters

PINK 'PENETRATOR' - NON CORE PDC

PDC STEPPED DRAG BIT 4 WING - FULL FLUSH

ALL ROUNDER

The Rolls Royce of drill bits! Machined on 5-axis cutter. Super Premium, heavy set PDC cutters provide improved wear resistance and erosion. For applications of high fluid volume and high penetration in clay, chalk, mudstone and sandstone.

- **Premium range - machined from one piece, no welding and designed with computational fluid dynamics**
- **Size wall PDC inserts for increased gauge protection**
- **Sizes ranging up to 300mm***
- **13mm PDC cutters with carbide protection added for durability**
- **ALL thread types available**
- **Increased internal diameter to reduce choke point and increase flow**
- **PDC cutter damage is minimised by increased flow rates by reducing frictional heat that can cause damage to the PDC blade and cutter.**

DESCRIPTION	
PDC STEPPED DRAG BIT- FULL FLUSH	
100MM	€ 757
130MM	€ 976
135MM	€ 983
140MM	€ 993
150MM	€ 1,084
160MM	€ 1,160

*Further sizes available in all thread types and different internal diameters

PINK 'PENETRATOR' - NON CORE PDC

PDC ROUNDED DRAG BIT 5 WING – FULL FLUSH

ALL ROUNDER

The Rolls Royce of drill bits! CAD designed and cut on 5-axis machine. Super premium, heavy set PDC cutters provides improved wear resistance and erosion. For applications of high fluid volume or high sands.

- **Premium range - machined from on piece, no welding and designed with computational fluid dynamics**
- **Size wall PDC inserts for increased gauge protection**
- **Sizes ranging up to 300mm***
- **13mm PDC cutters with carbide protection added for durability**
- **ALL thread types**
- **Increased internal diameter to reduce choke point and increase flow**

DESCRIPTION	
PDC ROUNDED DRAG BIT – FULL FLUSH	
100MM	€ 930
130MM	€ 1,025
135MM	€ 1,050
140MM	€ 1,070
150MM	€ 1,165
160MM	€ 1,250

*Further sizes available in all thread types and different internal diameters

PINK 'PENETRATOR' - TCI DRAG

CARBIDE STEPPED DRAG BITS 3 WING - LOW PRESSURE FLUSH

SAND & SILT

A drill bit designed specifically for the Dutch market, drilling fluid is designed to flow out with minimal disturbance to the bore walls, resulting in undisturbed geology. Ideal for sandy conditions where price of a longer lasting PDC bit is a constraint.

- **Sizes ranging up to 300mm***
- **Low pressure flush opening**
- **ALL thread types available**
- **Increased internal diameter to reduce choke point and increase flow**

DESCRIPTION	
TCI FULL FLUSH DRAG BIT - **3 WING**	
100MM	€ 155
130MM	€ 240
135MM	€ 256
140MM	€ 265
150MM	€ 282
160MM	€ 298

*Further sizes available in all thread types and different internal diameters

PINK 'PENETRATOR' - TCI DRAG

CARBIDE STEPPED DRAG BITS 3 & 4 WING

SOFT

VALUE at its best, you cant beat a TCI drag bit if the conditions are rights!

- **Sizes ranging up to 300mm***
- **ALL thread types available**
- **Increased internal diameter to reduce choke point and increase flow**

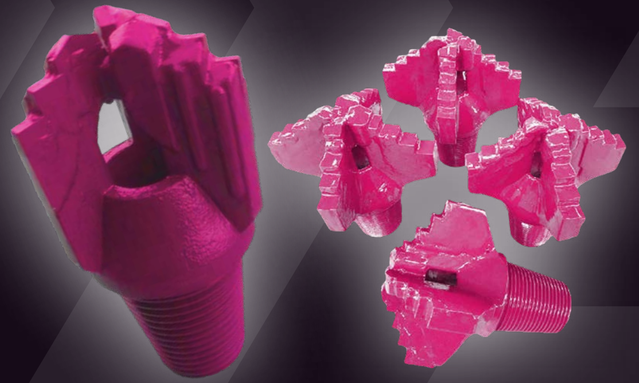

DESCRIPTION	
PDC CONCAVE BIT - 3 WING	
3 3/4" (95.25 MM)	£60.00
4 1/2" (114.3MM)	£65.00
4 3/4" (120.65MM)	£70.00
4 7/8" (123.825MM)	£72.00
5 1/8" (130.175MM)	£76.00
5 1/2" (139.7MM)	£78.00
5 5/8" (142.875MM)	£80.00
7 3/8" (187.325MM)	£133.00
PDC CONCAVE BIT - 4 WING	
3 3/4" (95.25 MM)	£75.00
4 1/2" (114.3MM)	£82.00
4 3/4" (120.65MM)	£88.00
4 7/8" (123.825MM)	£90.00
5 1/8" (130.175MM)	£95.00
5 1/2" (139.7MM)	£98.00
5 5/8" (142.875MM)	£100.00
7 3/8" (187.325MM)	£166.00

*Further sizes available in all thread types and different internal diameters

ROCK ROLLERS

TUNGSTEN CARBIDE & STEEL TOOTHED

MEDIUM TO HARD

Due to the vast amount of different variations of Rock Roller drill bits, we would struggle to lay the prices out in a simple neat table like we've done on the previous pages! Just give us a call today and we can discuss and give you some prices suitable for your requirements. Below is our range and on the next page is a brief explanation.

SLIM (2 1/2" - 3 1/2")	**Geotechnical drilling; thread A-Rod 3TPI or N-Rod 4TPI**
STANDARD (3 2/3" - 17 1/2")	**Water well drilling etc.**
TRACK (4 1/2" - 17 1/2")	**Steel tooth with leg protection; open bearings**
XTREME (4 1/2" - 17 1/2")	**Steel tooth or tungsten carbide with leg protection; sealed roller or friction bearings**
ALPINE (4 1/2" - 8 3/4")	**HDD application with limited RPM140**
LIN (3 1/2" - 11 5/8")	**Micro piling and designed to be welded to drilling rods (lost in hole)**
HOC (5 7/8" - 17 1/2")	**Cone cutters ("bit third"), hole openers for the trenchless technology**
MINER (4 3/4" - 16")	**Mining drilling (blasthole drilling) with air circulation (cooling)**

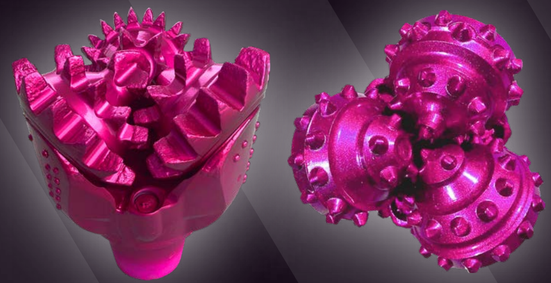

ROCK ROLLERS

TUNGSTEN CARBIDE & STEEL TOOTHED

MEDIUM TO HARD

Tricone Rock Rollers come in many varieties and can deal with a wide range of different rock formations and there is an ideal Tricone bit for soft, medium, or hard rock formations. We supply 1000's of different types of bits and due to the complexity of the types and grades available, its almost impossible to list them all without it becoming very confusing. Therefore, it's always best to CALL! **+44 (0)1580 388792**

Below is a basic explanation of our range, split down by **Series, Type, Grading, Option & Size**

Series:

1. SLIM (2 1/2" - 3 1/2"): geotechnical drilling; thread A-Rod 3TPI or N-Rod 4TPI
2. STANDARD (3 2/3" - 17 1/2"): water well drilling etc.
3. TRACK (4 1/2" - 17 1/2"): steel tooth with leg protection; open bearings
4. XTREME (4 1/2" - 17 1/2"): steel tooth or tungsten carbide with leg protection; sealed roller or friction bearings
5. ALPINE (4 1/2" - 8 3/4"): HDD application with limited RPM140
6. LIN (3 1/2" - 11 5/8"): micro piling and designed to be welded to drilling rods (lost in hole)
7. HOC (5 7/8" - 17 1/2"): cone cutters ("bit third"), hole openers for the trenchless technology
8. MINER (4 3/4" - 16"): mining drilling (blasthole drilling) with air circulation (cooling)

Type:

1. Steel toothed
2. TCI

Options:

L - a hard facing on leg edge
S - tungsten carbide insert on leg shirttail about edges (TCI 1/3)
SS - tungsten carbide inserts on leg shirttail about edges and forward side of shirttail (TCI 2/3)
T - hard facing on steel teeth of cone
H - hard facing on cone gauge
G - tungsten carbide inserts on cone gauges (for steel tooth bits)
D - 30% tungsten carbide inserts coated by diamond that installed on heel and gauge rows

Size:

Each series has a specific size range but combined our range goes from 2 ½" - 20".

IADC Dull Grading Grade:

The first digit denotes the formation hardness the tooth or button bit can drill. The numbers 1, 2 and 3 indicate a tooth bit with 1 being used for soft formations, 2 for medium, and 3 for hard. The numbers 4, 5, 6, 7 and 8 denote tungsten carbide inserts designed for different formation hardness with 4 being softest and 8 being the hardest.

The second digit indicates formation hardness the bit can drill. The number 1 is the softest formation and 4 the hardest.

The third digit indicates bearing type. The numbers 1, 2 and 3 indicate a roller bearing, 4 and 5 a sealed roller bearing, and 6 and 7 indicate a sealed journal bearing.

The fourth digit is a letter code indicating certain characteristics:

A - Air Application
B - Special Bearing
C - Centre Jetted
D - Deviation Control
E - Extended Jets
G - Extra Gauge/Body Protection
H - Horizontal/Steering Application
J - Jet Deflection
L - Lug Pads
M - Motor Application
S - Standard Steel Tooth
T - Two Cone
W - Enhanced Cutting Structure
X - Chisel Inserts
Y - Conical Inserts
Z - Other Inserts

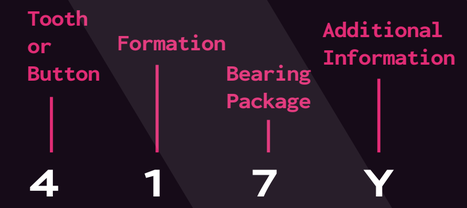

PINK 'PENETRATOR' - CORE DRILLING TOOLING

We have a complete range of core bits, casing shoes and reaming shells perfected for use in all formations. Please contact us to discuss your requirements.

- **PDC**
- **Tungsten Carbide**
- **Surface Set Diamond**
- **Impregnated Diamond**
- **TSP Cube Set Core Bits ("Geocube")**

SIZE AVAILABLE	
H SERIES	HWF, 412F
P SERIES	PWF, PQ
S SERIES	SWF
Q SERIES	AQ, BQ, NQ. NQ2, NQ3, NQTT, HQ, HQ3, HQTT, PQ, PQ3, PQTT, AQTK, BQTK
T2 SERIES	T2 46, T2 56, T2 66, T2 76, T2 86, T2 101
T6 SERIES	T6 76, T6 86, T6 101, T6 116, T6 131, T6 146,
T6S SERIES	T6S 76, T6S 86, T6S 101, T6S 116, T6S 131, T6S 146
T SERIES	T36, T46, T56, T66, T76, T86
Z SERIES	Z46, Z56, Z66, Z76, Z86, Z101, Z116, Z131, Z146
B SERIES	B36, B46, B56, B66, B76, B86, B101, B116, B131, B146
WF SERIES	HWF, PWF, SWF, UWF, ZWF
WT SERIES	RWT, EWT, AWT, BWT, NWT, HWT (SINGLE TUBE, DOUBLE TUBE)
WG SERIES	EWG, AWG, BWG, NWG, HWG (SINGLE TUBE, DOUBLE TUBE)
WM SERIES	EWM, AWM, BWM, NWM, HWM
OTHERS	NMLC, HMLC, LTK48, LTK60, BGM, NGM, ADBG, TBW, TNW, ATW, BTW, NTW, HTW, NXD3, AX, NX, NXC, AXT, T6H, 4 9/16, NWD4, 412F, SK6L146, TT46, TT56, TB56, TS16, CHD101, GEOBORE S

Further sizes available in all thread types and different internal diameters
++44 (0) 1580 388792 – please call for specific requirements

GTD PROBE REELERS

GTD PROBE REELERS

The probe reeler is often overlooked, but is an important part of an efficient operation. It is a false economy to make do without one if you are truly committed to drilling down your cost per metre.

Why? Friction is a huge source of frustration and is a drag on manpower, efficiency and safety. A probe reeler can be the make-or-break element of whether the install goes to depth.

GTD have a range to cater for most budgets, from fully hydraulic double probe reelers to free spinning singles.

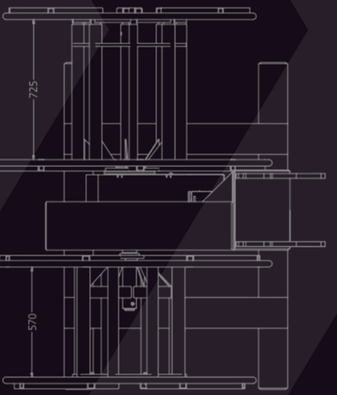

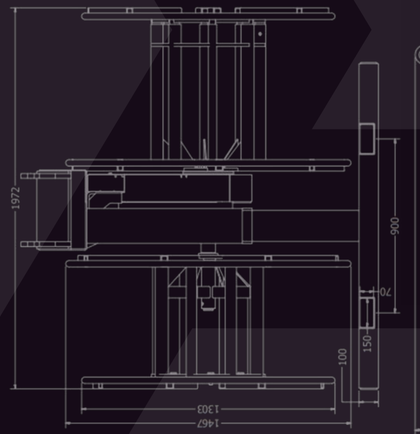

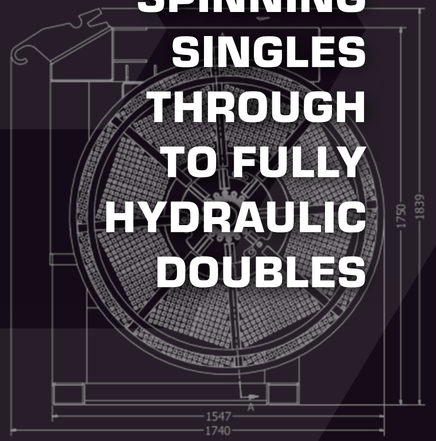

GTD PRODUCE A RANGE OF QUALITY PROBE REELER'S, FROM FREE SPINNING SINGLES THROUGH TO FULLY HYDRAULIC DOUBLES

HYDRAULIC & FREE SPIN DOUBLE PROBE REELER

PRICES STARTING FROM £4,000

OPTIONS:

Hydraulic driven in/out reel

With hydraulic free spin option

Extendible drums (500mm)

Upgrade to aluminium wheel from steel

Detachable bottom base instead of fixed base

HYDRAULIC & FREE SPIN SINGLE PROBE REELER

PRICES STARTING FROM £3,000

OPTIONS:

Hydraulic driven in/out reel

With Hydraulic free spin option

Extendible drums (500mm)

Upgrade to aluminium wheel from steel

WP 330 BAR MSHA

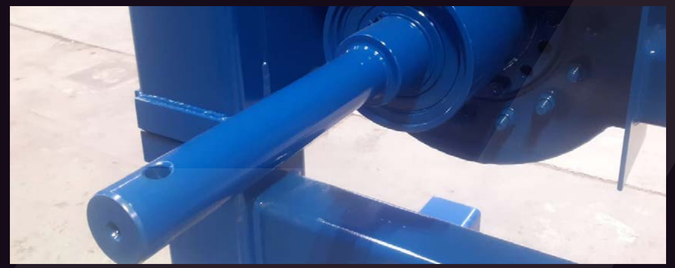

WP 330 BAR MSHA

GTD GROUND SOURCE PROBES

GTD GROUND SOURCE PROBES

GTD has partnered with two of the worlds leading ground source probe manufactures, Jansen & Haka Gerodur, from Switzerland.

They produce the highest quality probes on the market as well as leading the field in design with award winning products.

LOOPS

- Single - U 32mm
- Twin - U 32mm
- Single - U 40mm
- Twin - U 40mm
- Single - U 50mm

COAXIAL

- Coaxial 63mm

THE PROBE IS THE MOST IMPORTANT COMPONENT OF THE BOREHOLE AND THE ONLY ITEM THE CLIENT IS PURCHASING

DO YOU REALLY WANT TO SKIMP ON AN INFERIOR PRODUCT?

GTD GROUND SOURCE PROBES

HAKA GEROTHERM® LOOPS

The well-established GEROtherm® ground source loop, is one of the top loops on the market. With low hydraulic resistance and design that contains proven features and many advantages for the designers, engineers, drillers and clients.

- Increased wall thickness in the U-bend for higher pressure loads and stability up to PN32
- Increased protection of U-bend due to innovative surface structure
- Lean design for small drilling diameters and quick installation
- Minimized pressure loss due to increased cross section area in the U-bend < 10 mbar at 1.0 m/s
- Proven mud container in the U-bend
- Proven symmetric design - easiest preparation at the construction site
- Proven holding fixture for attachment of weights
- GEROtherm®-complete system is certified by the SKZ (Süddeutsches Kunststoffzentrum, Würzburg, Germany) according to the HR 3.26 system guideline and fulfils all requirements of the VDI 4640 und SIA 384/6:2010
- Life time over 100 years @ 20°C

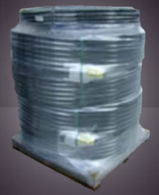

GTD GROUND SOURCE PROBES

JANSEN POWERWAVE COAXIAL

JANSEN Powerwave corrugated pipe technology offers the highest level of performance. The internal corrugation creates a turbulent flow in the brine medium – even at exceptionally low flow velocities, thus improves the heat transfer. The huge storage capacity allows for an optimal heat exchange with the earth and significantly increases the effectiveness of the heat pump.

- Innovative technology that maximises performance
- The coaxial loop with corrugated pipe technology offers maximum efficiency. Its outer corrugated pipe makes possible better energy absorption from the ground as well as reliable and quick installation.
- GTD JANSEN Powerwave loops are manufactured from notch-resistant, high-quality PE 100 RC material of the latest generation.

ADVANTAGES

- Slender design (66mm), only needs a very small hole to be drilled. Which means a faster, easier install with increased productivity.
- Up to 25% shorter boreholes (Due to optimised thermal performance)

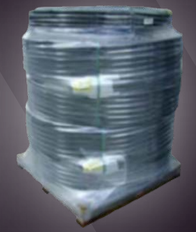

GTD PROBE WEIGHTS

GTD PROBE WEIGHTS

Getting the correct weight and design is essential to aid the installation of probes in boreholes.

Weight is required to counter act the buoyancy of the probe material. This coupled with ground conditions, tight borehole diameters, viscosity of the borehole fluid, means that the probes don't fall under their own weight.

GTD has used its decades of experience to produce its own in-house design which improves upon the current market offering. We have addressed the weakness in the cast type weight, replaced the connection joints with a carbon steel insert and we have also increased the thickness for extra strength. This means there is a reduced risk of snapped connections, weights dropping on personnel and weights breaking off probes.

The slim design with a conical end ensures smooth and easy installation. They can also be bolted together for additional weight if required. We suggest a guide of 40kg per 100m for a single loop.

Manufactured from carbon steel and cast iron with an outside diameter of 70mm, with a mass of 40kg. We have also reduced the cost of manufacturing and supply by selling weights by the crate (1000KG).

Price: £48.50 each = £1,212.50 for a crate (25)
Includes Shackles

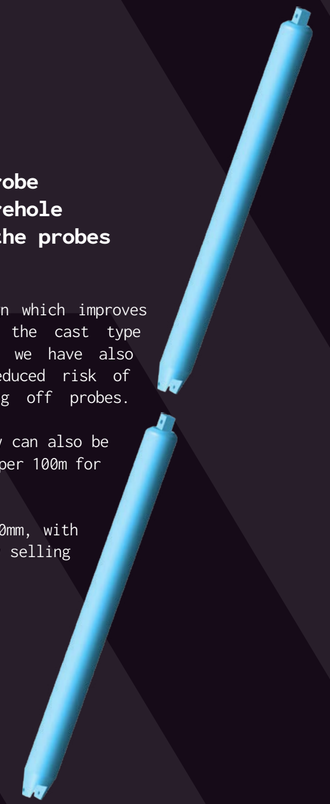

GTD GROUT & GROUTERS

THERMO GROUT

Specially developed for back filling boreholes for both heating and cooling energy systems. Thermo Grout is used widely across Europe and is manufactured for reliable, flexible, consistent thermal conductivity and ease of injection. Its unique formulation allows higher yields whilst achieving consistent high thermal conductivity.

It exceeds the high and exacting standard required for geothermal conductivity, whilst also ensuring separation and low permeability between the geological layers. Thermo Grout is certified by KIWA according to the BRL 5078 standard.

PRICE

- **GTD ThermoGrout - Bentonite Mix (Component A) = £6.00 a bag**
- **GTD ThermoGrout - Sand (Component B) = £2.50 a bag**
- **(1:4 mix ratio)**
- **Pre mixed bulk bags (1000Kg) also available for larger projects, batch mixing with a hopper**

USAGE GUIDE:

Example volumes of Thermo Grout mix from 1 ton of mix:
Thermal Conductivity of 1.8 = 1.3m³

Based on a 40mm loop installed into a borehole drilled with a 5 1/8” drill bit, 1000kg of GTD -Thermo Grout mix will fill:
81 metres @ Thermal Conductivity of 1.8

Based on a 40mm loop installed into a borehole drilled with a 5 5/8” drill bit, one pallet of Thermo Grout will fill:
64 metres @ Thermal Conductivity of 1.8

WHY THERMO GROUT

- **Easy to mix, inject and pump (A more fluid mix, so way easier to pump!)**
- **Consistent high thermal conductivity levels**
- **Cost effective due to total volume achieved from mix**
- **Environmentally friendly, all natural products and minimal industrial processing**
- **Clear and simple to use component parts**

Thermo Grout mix consists of >99% pure quartz silica, resulting in a high thermal conductivity (TC). Additives such as cement reduce the TC significantly. The size and shape of the sand grains also determine the TC of the grout, this is why we provide a complete two component product.

Thermo Grout uses the best quality Silica available mixed with thermally improved Bentonite. By means of computer modelling we achieved an optimal composition with a low resistance, this enables it to be easily pumped into the borehole. Enabling the grout to come into contact with the loops and the walls of the borehole everywhere. This guarantees the optimum TC between the borehole wall and loops.

Due to the very low permeability of the grout, a good seal between the different layers of the borehole is guaranteed. Thermo Grout mix has little or no shrinkage after the borehole has been filled with grout.

IMPROVE PRODUCTIVITY, ENVIRONMENTAL IMPACT, HEALTH & SAFETY WITH GTD MUD CLEANING AND RECYCLING SYSTEMS

THERMO GROUT - SPECIFICATIONS

Thermo Grout is a three part system, mix part A (bentonite) & part B (sand) with part C (water).

The sand isn't just any sand, its consists of >99% pure quartz silica and works specifically with part A & C. This is key to achieving the consistent and high thermal conductivity.

- Maximum performance, with a conductivity of your choice while maintaining the requirements stated in BRL 5078!
- No addition of chemical components, therefore environmentally friendly
- Thermal Conductivity (TC) from 1.4 - 1.8 W / m.K
- Low Permeability
- Percent of solids based on TC ranging from 30.0 - 65.0%
- 1.8 refers to the maximum thermal conductivity (W / m.K). TC be reduced to 1.4 by adding extra water to the mixture without the risk of not meeting the BRL 5078 standard

THERMAL CONDUCTIVITY	WATER (LITRES)	
1.8	60	600
1.7	72	720
1.6	84	840
1.55	96	960
1.4	108	1080
1.35	120	1200
Total Weight of Component A & B (1:4 bag ratio)	120kg (1 Part A and 4 Parts B)	1200kg (200kg Part A and 1000kg Part B)

1. Select the required conductivity on the left hand column
2. Select your desired dry weight of mix per batch from the bottom row
3. Where the two meet on the table, this equals the required amount of water required per batch

GTD STOCK A FULL RANGE OF GROUTERS, FROM ULTRA MOBILE THROUGH TO FULL SELF POWERED COMPUTER MANAGED SYSTEMS

FRANCHISE & PACKAGED DRILLING OPERATIONS

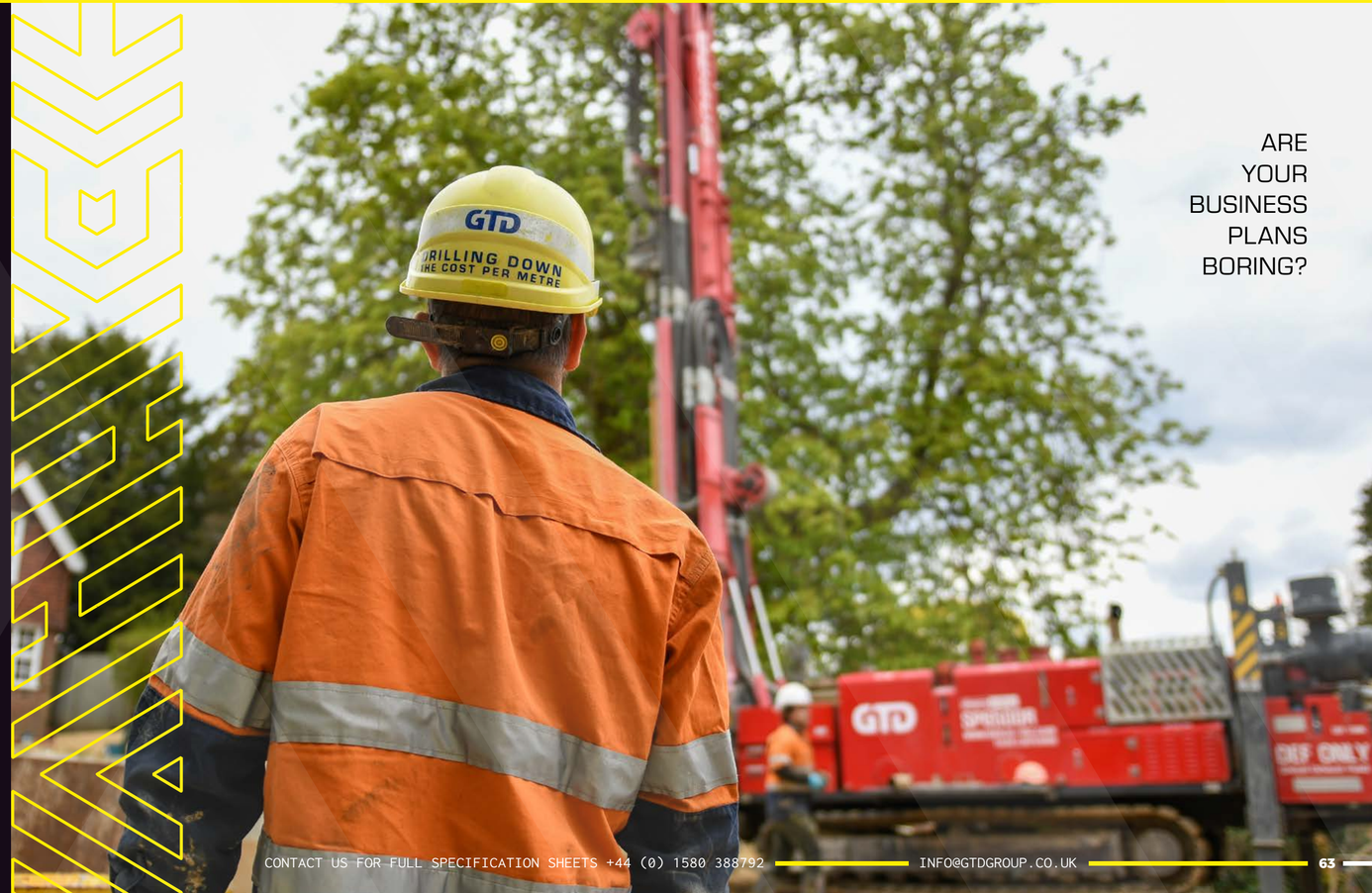

ARE YOUR BUSINESS PLANS BORING?

FRANCHISE & PACKAGED DRILLING OPERATIONS

Are you looking to expand or set up a new ground source drilling operation?

Whether you are an existing company looking to expand your current drilling operation, moving in to a new sector or a start up company, GTD are here to help!

Drilling for ground source heating/cooling is currently operating at <1% of its potential market share in the UK alone.

It is a highly accelerating growth sector and to keep up with demand, UK drillers will have to grow exponentially too (driven by legislation and Government carbon zero targets).

GTD provide:

- Complete turn key drilling packages
- Training and development
- Operating procedures and operational assistance
- Access to large scale contracts
- Access to loan equipment pool, such as compressors and mud recycling equipment
- Supervision and management support
- Service and maintenance
- Increased spending power, access to bulk purchasing and economies of scale
- National and regional advertising

GTD OFFER EASY ACCESS TO EQUIPMENT TRAINING AND SUPPORT FOR START-UP AND EXPANDING BUSINESSES

TALK TO US

+44 (0) 1580 388792

BECAUSE BROCHURES MAKE TERRIBLE LISTENERS!

GTD GROUP

+44 (0) 1580 388792
INFO@GTDGROUP.CO.UK
WWW.GTDGROUP.CO.UK